Iridium 9602N Transceiver Developer Guide

IRDM-1023-UDOC-002 | v7.1 | r1C78E940B9 | 2025-OCT-07

LEGAL DISCLAIMER AND CONDITIONS OF USE

Use of the product (the "Product") described in this document (the "Document"), the information provided in this Document, and this Document itself is governed by and subject to the terms, licenses and restrictions of your Agreement with Iridium. Please review that Agreement. This Document is Iridium proprietary business information. Consistent with your Agreement with Iridium, you may not disclose this Document to others without express prior written permission from Iridium. Any violation of your Agreement's Proprietary and Confidentiality obligations shall result in remedies to the fullest extent available to Iridium at law or in equity.

Reasonable effort has been made to make the information in this Document reliable and consistent with other specifications, test measurements and other information. However, Iridium Satellite LLC and its affiliated companies, directors, officers, employees, agents, trustees or consultants ("Iridium") assume no responsibility for any typographical, technical, content or other inaccuracies in this document. Iridium reserves the right in its sole discretion and without notice to you to change this Document and materials and/or revise this Document or withdraw it at any time. You assume any and all risks of using the Product and any information provided in this Document.

IRIDIUM MAKES NO REPRESENTATIONS, GUARANTEES, CONDITIONS OR WARRANTIES, WHETHER EXPRESS OR IMPLIED, INCLUDING WITHOUT LIMITATION, IMPLIED REPRESENTATIONS, GUARANTEES, CONDITIONS OR WARRANTIES OF MERCHANTABILITY AND FITNESS FOR A PARTICULAR PURPOSE, NON-INFRINGEMENT, SATISFACTORY QUALITY, NON-INTERFERENCE, ACCURACY OF INFORMATIONAL CONTENT, OR THOSE ARISING FROM OR RELATED TO A COURSE OF DEALING, LAW, USAGE, OR TRADE PRACTICE OR ARISING FROM OR RELATED TO THE PERFORMANCE OR NONPERFORMANCE OF THE PRODUCT OR THIS DOCUMENT. ANY OTHER STANDARDS OF PERFORMANCE, GUARANTEES, CONDITIONS AND WARRANTIES ARE HEREBY EXPRESSLY EXCLUDED AND DISCLAIMED TO THE FULLEST EXTENT PERMITTED BY LAW. THIS DISCLAIMER AND EXCLUSION SHALL APPLY EVEN IF THE EXPRESS LIMITED WARRANTY AND DOCUMENTATION FOR THE PRODUCT FAILS OF ITS ESSENTIAL PURPOSE.

IN NO EVENT SHALL IRIDIUM BE LIABLE, REGARDLESS OF LEGAL THEORY, INCLUDING WITHOUT LIMITATION CONTRACT, EXPRESS OR IMPLIED WARRANTY, STRICT LIABILITY, GROSS NEGLIGENCE OR NEGLIGENCE, FOR ANY DAMAGES IN EXCESS OF THE PURCHASE PRICE OF THE PRODUCT, IF ANY. NOR SHALL IRIDIUM BE LIABLE FOR ANY DIRECT, INDIRECT, INCIDENTAL, SPECIAL OR CONSEQUENTIAL DAMAGES OF ANY KIND, LOSS OF REVENUE OR PROFITS, LOSS OF BUSINESS, LOSS OF PRIVACY, LOSS OF USE, LOSS OF TIME OR INCONVENIENCE, LOSS OF INFORMATION OR DATA, SOFTWARE OR APPLICATIONS OR OTHER FINANCIAL LOSS CAUSED BY THE PRODUCT (INCLUDING HARDWARE, SOFTWARE AND/OR FIRMWARE) AND/OR THE IRIDIUM SATELLITE SERVICES, OR ARISING OUT OF OR IN CONNECTION WITH THE ABILITY OR INABILITY TO USE THE PRODUCT OR ANY OTHER IRIDIUM PRODUCTS (INCLUDING HARDWARE, SOFTWARE AND/OR FIRMWARE) AND/OR THE IRIDIUM SATELLITE SERVICES TO THE FULLEST EXTENT THESE DAMAGES MAY BE DISCLAIMED BY LAW AND WHETHER IRIDIUM WAS ADVISED OF THE POSSIBILITIES OF SUCH DAMAGES. IRIDIUM IS NOT LIABLE FOR ANY CLAIM MADE BY A THIRD PARTY OR MADE BY YOU FOR A THIRD PARTY.

LIMITED LICENSE TO SOFTWARE/FIRMWARE

The Product may contain software, including firmware and software made available by one or more third parties (the "Software.") To the extent it does, each such item of software is subject to the applicable terms and conditions (the "Software Terms") available at https://www.iridium.com/resources/?fwp_resource_categories=legal-notice. Do not use the Product until you have carefully read the Software Terms. Do not use the Product if you do not wish to agree to the Software Terms. Your use of the Product constitutes your acceptance of all of the Software Terms. Without limiting the foregoing, if you do not agree to the Software Terms, you are not granted any license or rights whatsoever to use the software contained on the Product.

EXPORT COMPLIANCE INFORMATION

This document or item contains information subject to the Export Administration Regulations (EAR) (15 CFR 730-774). It may not be exported, disclosed, or transferred to any foreign person without the applicable prior authorization of the U.S. Department of Commerce. Violations may result in civil or criminal penalties. ECCN: 5E991

© Iridium Satellite LLC 2010-2025

Revision History

Version	Date	Description
1.1	15-APR-2010	Initial Product Release
2.1	27-Oct-2011	Added note on non-portable certification to section 1.2 and added FCC and IC warning statements (sections 1.4 and 1.5)
2.4	14-APR-2012	Modified Figure 4 "Example host system motherboard footprint showing mounting position of 9602" to show the hole size and position tolerances that should be used to make a 9602 motherboard
4	20-AUG-2012	Updated section "Legal Disclaimer and Conditions of Use".
	19-NOV-2012	Added Document ID MAN0017
5	27-JAN-2015	Updated to include 9602N
6	15-AUG-2017	Added company information per RED requirements. Added summary simplified EU declaration of conformity. Added RED specific tests. Added power specific information for transmit frequency band, receive frequency band and transmit and conducted power.
7.1	07-OCT-2025	Updated content for 9602N; EU Declaration of Conformity; Regulatory and Technical Certifications table; and Power Consumption profile. Updated formatting and added references to the new Iridium 9602 and 9603 AT Command Reference Guide. Added updated Modes of Operation. Reissue document number from MAN0017 to IRDM-1023-UDOC-002.

Documentation Feedback

To provide feedback on this document, open a ticket in the Partner Support portal (Iridium Service Desk) and under Component select Document Feedback.

Table of Contents

Revision History . . . 2
Documentation Feedback . . . 2
Abbreviations . . . 4
1. Product Overview . . . 6
1.1. Key Features . . . 6
1.2. Transceiver Packaging and Regulatory Certification . . . 7
1.3. Software Revision . . . 8
1.4. FCC Warning Statement . . . 8
1.5. Radio Interference . . . 8
1.6. RF Exposure . . . 9
1.7. FCC Class B Digital Device Notice . . . 9
1.8. Labeling Requirements for the Host device . . . 10
1.9. CAN ICES-3 (B) / NMB-3 (B) . . . 10
1.10. Simplified EU Declaration of Conformity . . . 10
1.11. R&TTE Statement . . . 10
2. Physical Specification . . . 13
2.1. Transceiver Dimensions . . . 13
2.2. Mechanical Dimensions - Motherboard Mounting . . . 15
2.3. Environmental . . . 18
2.4. Physical Interface Connectors . . . 19
3. Electrical Interfaces . . . 20
3.1. User Connector . . . 20
3.2. DC Power Interface . . . 22
3.3. Serial Data Interface . . . 26
3.4. Hardware Failure Reporting . . . 32
3.5. Network Available Output . . . 32
3.6. DC Supply Indicator Output . . . 33
4. RF Interface . . . 34
4.1. RF Connector Types . . . 34
4.2. ANT Connector . . . 34
4.3. GPS Connector . . . 35
4.4. Radio Interface Specifications . . . 36
4.5. Radio Characteristics . . . 36
4.6. S-meter Performance . . . 37
5. AT Command Set Description . . . 38

Abbreviations

Term	Description
CE	Conformité Européene
CTS	(V.24 signal) Clear To Send. This signal is used to control the flow of data to the Iridium 9602/9602N
DC	Direct Current
DCD	(V.24 signal) Data Carrier Detect
DCE	Data Communications Equipment. In this Product, DCE refers to the Iridium 9602/9602N
DSR	(V.24 signal) Data Set Ready. This signal, from the Iridium 9602/9602N, indicates readiness to accept communication over the data port
DTE	Data Terminal Equipment. In this Product, DTE refers to the FA
DTR	(V.24 signal) Data Terminal Ready. This signal, from the FA, requests the Iridium 9602/9602N to accept communication over the data port
E/M/O	Electrical / Mechanical / Operational
ESS	ETC SBD Subsystem (synonymous with GSS)
ETC	Earth Terminal Controller
FA	Field Application; the application controlling the Iridium 9602/9602N
FCC	Federal Communications Commission
GDB	Global Data Broadcast (The technical name for the Iridium Burst® Service)
GND	Ground
GSS	Gateway SBD Subsystem (synonymous with ESS)
IC	Industry Canada (i.e., ISED)
IMEI	International Mobile Equipment Identity
LBT	L-Band Transceiver
MO	Mobile Originated
MOMSN	Mobile Originated Message Sequence Number
MT	Mobile Terminated
MTMSN	Mobile Terminated Message Sequence Number
RHCP	Right Hand Circular Polarization

Term	Description
RI	(V.24 signal) Ring Indicate. This signal, from the Iridium 9602/9602N, indicates that an MT message is present at the GSS
RTS	(V.24 signal) Request To Send. This signal is used to control the flow of data from the Iridium 9602/9602N.
SBD	Short Burst Data®
SMS	Short Message Service
TBA	To Be Advised
UART	Universal Asynchronous Receiver Transmitter
VAM	Value Added Manufacturer
VAR	Value Added Reseller
VSWR	Voltage Standing Wave Ratio

1. Product Overview

The Iridium 9602N Transceiver is designed to be integrated into a wireless data application with other host system hardware and software to produce a full solution designed for a specific application or vertical market. Examples of these solutions include tracking a maritime vessel or automatic vehicle location.

The 9602N is designed to meet the regulatory requirements for approval for FCC, Canada, and CE assuming an antenna with a gain of ~3 dBi and adequate shielding. This allows the 9602N to be integrated into a variety of wireless data applications.

The 9602N is a single board transceiver provided as a 'black box' transceiver module with all device interfaces provided by a single multi-pin interface connector in addition to the antenna connector. The Product only provides the core transceiver. All other end user Field Application functions such as GPS, microprocessor based logic control, digital and analog inputs, digital and analog outputs, power supply and antenna must be provided by the solution developer. The device interface across the user connector consists of a serial-data interface, DC power input, network available output and a power on/off control line.

The 9602N does not incorporate nor require a Subscriber Identity Module (also known as a SIM Card) to be inserted into the Transceiver. The 9602N is intended to be used as a transceiver fitted within another host system. The 9602N transceiver is designed to comply with the standards for Radio Emissions Compliance, Electromagnetic Compatibility, and AC Safety in the United States, European Union and Canada, for host systems that provide safe connections to power supply and external antenna or cable distribution system.

The 9602N is described within this document as "9602N," "9602N Transceiver", and "Transceiver". All of these terms refer to the same product.

1.1. Key Features

- Single board transceiver
- Small form factor
- Aluminum alloy casework (LM2 / LM24) with Alodine 2600 passivation coating
- No SIM card
- Designed to be incorporated into an OEM solution
- Maximum mobile originated message size 340 bytes
- Maximum mobile terminated message size 270 bytes
- Automatic Notification to the Transceiver that a mobile terminated message is queued at the Gateway
- Global operating capability
- RoHS compliant

1.2. Transceiver Packaging and Regulatory Certification

The 9602N Transceiver is a regulatory approved daughter transceiver that can be fitted within an enclosed host system. With appropriate external connections, the host system can be designed to meet full transceiver regulatory tests and sold as a Regulatory Certified product that meets CE, FCC and IC requirements.

The 9602N has regulatory and technical certifications as shown in Table 1.

The 9602N is certified as a transceiver for non-portable applications - i.e. those that do not combine the 9602N with another radio element and have an intended separation distance of over 20 cm from a person. The OEM integrator is responsible for ensuring that their end-product complies with additional compliance requirements required with this transceiver installed, such as digital device/unintentional emissions requirements and any additional potential RF exposure requirements, such as portable use or co-location requirements.

Table 1. 9602N Regulatory and Technical Certifications

Regulatory Approvals	Radio Tests	EMC Tests	E/M/O Safety Tests
CE	ETSI EN 301 441 V1.1.1 (2000-05)	ETSI EN 301 489-1: V2.2.3 (2019-11) ETSI EN 301 489-20: V2.2.1 (2021- 11) EN61000-4-2 : 2009 EN61000-4-3 : 2006 + A1: 2008 + A2: 2010 EN61000-4-4 : 2004 + A1: 2010 EN61000-4-6 : 2009 EN55022:2006 + A1: 2007	EN60950-1:2006 + A11: 2009 + A1: 2010 + A12: 2011
EU (RED)	ETSI EN 301 441 V2.1.1 (2016 - 06) EN 62311:2008	ETSI EN 301-489-1 V2.1.1 (2016) ETSI EN 301 489-20 V1.2.1(2002-11)	IEC 62368-1:2014
FCC	FCC CFR47 parts 1.1310 (2016), 2 (2020), 15B (2020), and 25 (2020)	EN61000-4-2:1995 + A2:2001 Part 4.2 EN61000-4-3:2002 Part 4.3 EN61000-4-4:2004 EN61000-4-6:1996 + A1:2001 Part 4.6 EN55022:2006	
Industry Canada	ISED RSS-170: Issue 3 (07-2015) Health Canada Safety Code 6	ICES-003: Issue 7: 2020 ISED RSS-GEN: Issue 5 (04-2018) + A2 (02-2021)	

1.3. Software Revision

Product Developers should read this document in conjunction with the "Software Release Notes" relevant to the revision of the software that is loaded into their 9602N Transceiver.

Product Developers should take into account in their software design that it is possible that a transceiver may have an earlier software release and may therefore have different capabilities to those listed in this document. Product Developers are advised to ensure that production procedures for finished goods confirm that the software used in the Product Developer application is designed for the Software Release loaded in the 9602N Transceiver. This can be read out of the transceiver using the AT command interface. A software upgrade utility is provided with each software release. The utility runs on a Windows compatible OS and automatically upgrades the transceiver with the latest version.

1.4. FCC Warning Statement

- This device complies with Part 15 of the FCC Rules. Operation is subject to the following two conditions:
  1. This device may not cause harmful interference, and
  2. This device must accept any interference received, including interference that may cause undesired operation.
- This equipment complies with FCC radiation exposure limits set forth for an uncontrolled environment. End users must follow the specific operating instructions for satisfying RF exposure compliance. This transmitter must not be co-located or operating in conjunction with any other antenna or transmitter.
- Changes or modifications not expressly approved by the party responsible for compliance could void the user’s authority to operate the equipment.

1.5. Radio Interference

This device complies with Part 15 of the FCC Rules and Industry Canada license-exempt RSS standard(s). Operation is subject to the following two conditions: (1) this device may not cause interference, and (2) this device must accept any interference, including interference that may cause undesired operation of the device.

Under Industry Canada regulations, this radio transmitter may only operate using an antenna of a type and maximum (or lesser) gain approved for the transmitter by Industry Canada. To reduce potential radio interference to other users, the antenna type and its gain should be so chosen that the equivalent isotropically radiated power (EIRP) is not more than that necessary for successful communication.

Le présent appareil est conforme aux CNR d’Industrie Canada applicables aux appareils radio exempts de licence. L’exploitation est autorisée aux deux conditions suivantes : (1) l’appareil ne doit pas produire de brouillage, et (2) l’utilisateur de l’appareil doit accepter tout brouillage radioélectrique subi, même si le brouillage est susceptible d’en compromettre le fonctionnement.

Conformément à la réglementation d'Industrie Canada, le présent émetteur radio peut fonctionner avec une antenne d'un type et d'un gain maximal (ou inférieur) approuvé pour l'émetteur par Industrie Canada. Dans le but de réduire les risques de brouillage radioélectrique à l'intention des autres utilisateurs, il faut choisir le type d'antenne et son gain de sorte que la puissance isotrope rayonnée équivalente (PIRE) ne dépasse pas l'intensité nécessaire à l'établissement d'une communication satisfaisante.

1.6. RF Exposure

This equipment complies with FCC and IC radiation exposure limits set forth for an uncontrolled environment. The antenna should be installed and operated with minimum distance of 20 cm between the radiator and your body. Antenna gain must be below: 3.0 dBi. This transmitter must not be co-located or operating in conjunction with any other antenna or transmitter.

Cet appareil est conforme aux limites d'exposition aux rayonnements de la IC pour un environnement non contrôlé. L'antenne doit être installé de façon à garder une distance minimale de 20 centimètres entre la source de rayonnements et votre corps. Gain de l'antenne doit être ci-dessous: 3.0 dBi. L'émetteur ne doit pas être colocalisé ni fonctionner conjointement avec à autre antenne ou autre émetteur.

1.7. FCC Class B Digital Device Notice

This equipment has been tested and found to comply with the limits for a Class B digital device, pursuant to part 15 of the FCC Rules. These limits are designed to provide reasonable protection against harmful interference in a residential installation. This equipment generates, uses and can radiate radio frequency energy and, if not installed and used in accordance with the instructions, may cause harmful interference to radio communications. However, there is no guarantee that interference will not occur in a particular installation. If this equipment does cause harmful interference to radio or television reception, which can be determined by turning the equipment off and on, the user is encouraged to try to correct the interference by one or more of the following measures:

- Reorient or relocate the receiving antenna.
- Increase the separation between the equipment and receiver.
- Connect the equipment into an outlet on a circuit different from that to which the receiver is connected.
- Consult the dealer or an experienced radio/TV technician for help.

1.8. Labeling Requirements for the Host device

The host device shall be properly labeled to identify the modules within the host device. The certification label of the transceiver module shall be clearly visible at all times when installed in the host device, otherwise the host device must be labelled to display the FCC ID and IC of the transceiver module, preceded by the words "Contains transmitter module", or the word "Contains", or similar wording expressing the same meaning, as follows:

9602N
Contains FCC ID: Q639603N or Contains transmitter module FCC ID: Q639603N
Contains IC: 4629A-9603N or Contains transmitter module IC: 4629A-9603N

L'appareil hôte doit être étiqueté comme il faut pour permettre l'identification des modules qui s'y trouvent. L'étiquette de certification du module donné doit être posée sur l'appareil hôte à un endroit bien en vue en tout temps. En l'absence d'étiquette, l'appareil hôte doit porter une étiquette donnant le FCC ID et le IC du module, précédé des mots « Contient un module d'émission », du mot « Contient » ou d'une formulation similaire exprimant le même sens, comme suit:

9602N
Contains FCC ID: Q639603N or Contains transmitter module FCC ID: Q639603N
Contains IC: 4629A-9603N or Contains transmitter module IC: 4629A-9603N

1.9. CAN ICES-3 (B) / NMB-3 (B)

This Class B digital apparatus complies with Canadian ICES-003.

Cet appareil numérique de classe B est conforme à la norme canadienne ICES-003.

1.10. Simplified EU Declaration of Conformity

Iridium Satellite LLC hereby declares that the radio equipment Iridium core 9602N complies with Directive 2014/53/EU. The full text of the EU declarations of conformity is available at the following internet address: www.iridium.com under partner resources.

1.11. R&TTE Statement

Iridium Communications Inc. hereby declares that the 9602N complies with the essential requirements and other relevant provisions of Directive 2014/53/EU. A copy of the Declaration of Conformity is given below.

iridium Everywhere

EU Declaration of Conformity

We, Iridium Satellite LLC of 1750 Tysons Blvd, Suite 1400, McLean, VA 22102 USA declare under our sole responsibility that the following Product:

Product			
Product Name	Iridium 9602N		
Model Number	9602N	**Part Number**	SBDG9602
Description	Short Burst Data Transceiver for use with the Iridium satellite communication network.		

is in conformity with the essential requirements and other relevant requirements of the following Directives:

Radio Equipment Directive 2014/53/EU
RoHS Recast (RoHS2) Directive 2011/65/EU

The following harmonized standards and/or other normative documents were applied in full in accordance to Article 17 of Directive 2014/53/EU:

Directive Article	Standard / Version
Health and Safety Article 3.1(a)	EN 60950-1:2006 + A11:2009 + A1:2010 + A12:2011 + A2:2013
	AS/NZS 60950.1:2015
	EN 62311:2008
EMC Article 3.1(b)	EN 301 489-01 V2.2.3 (2019-11)
	EN 301 489-20 V2.2.1 (2021-11)
Radio Spectrum Article 3.2	EN 301 441 V2.1.1 (2016-06)

1750 Tysons Blvd., Suite 1400, McLean, VA 22102 USA t: +1.703.287.7400 f: +1.703.287.7450 www.iridium.com

IRIDIUM EVERYWHERE

iridium Everywhere

The conformity assessment procedure referred to in Article 17 and detailed in Annex II of Directive 2014/53/EU has been followed.

The technical documentation relevant to the above equipment will be held at Iridium Satellite LLC, 1750 Tysons Blvd, Suite 1400, McLean, VA 22102 USA.

Garrett Chandler
Executive Director, Gateway and Mobile Product Development

Iridium Satellite LLC
February 06, 2025

1750 Tysons Blvd., Suite 1400, McLean, VA 22102 USA t: +1.703.287.7400 f: +1.703.287.7450 www.iridium.com

IRIDIUM EVERYWHERE

2. Physical Specification

For illustrative purposes a picture of the Iridium 9602N Transceiver is shown in Figure 1.



Figure 1. Iridium 9602N Transceiver

2.1. Transceiver Dimensions

The overall dimensions of the 9602N transceiver and its weight are summarized in Table 2 and represented graphically in Figure 2.

Table 2. 9602N Mechanical Dimensions

Parameter	Value
Length	41.0 mm
Width	45.0 mm
Depth	13.0 mm
Weight (approximate)	30g

Additionally host system Product Developers should plan space for connection to the host system motherboard, including robust and electrically grounded connections to the antenna/cable distribution system.

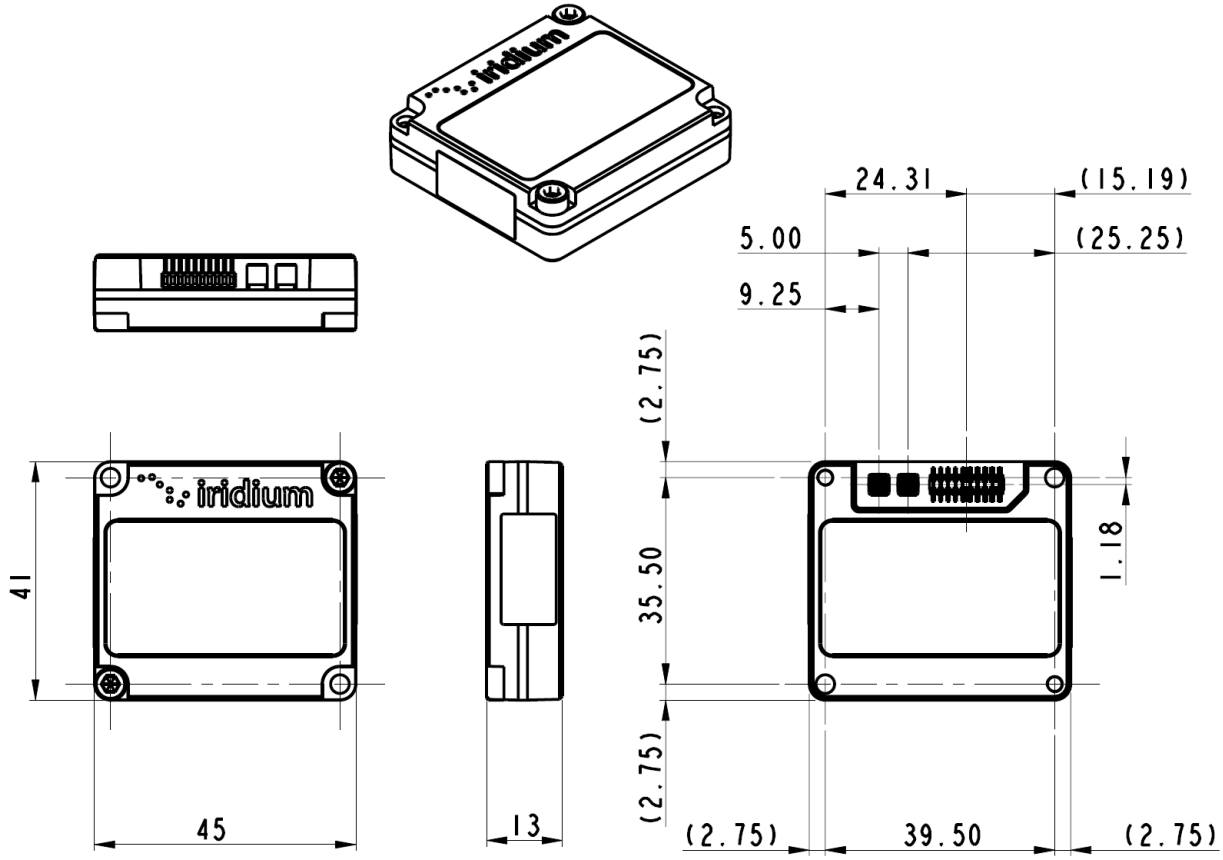

Figure 2. General Assembly and Dimensions of the 9602N Transceiver (Not to scale, dimensions in millimeters)

This drawing shows some of the key dimensions within the 9602N specify the mechanical position of its connectors with respect to its mounting holes.

2.2. Mechanical Dimensions - Motherboard Mounting

The 9602N Transceiver must be fitted within an enclosed host system. With appropriate external connections, the host system motherboard and host system enclosure can be designed to meet full transceiver regulatory tests.

The 9602N Transceiver is provided with two mounting holes, one at each diagonal corner. The transceiver should be assembled onto the motherboard of the host system, by pushing the transceiver onto matching connectors on the motherboard and then securing the diagonal mounting holes to the motherboard using mechanical fasteners.

The figures and tables below provide mechanical design information to connect a 9602N transceiver to a host system motherboard.

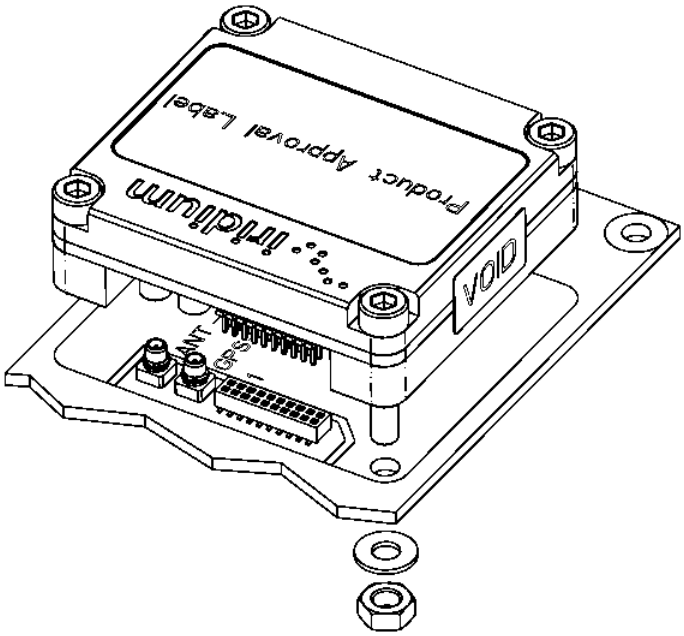

Figure 3. General Assembly of the 9602N onto Motherboard of the Host System

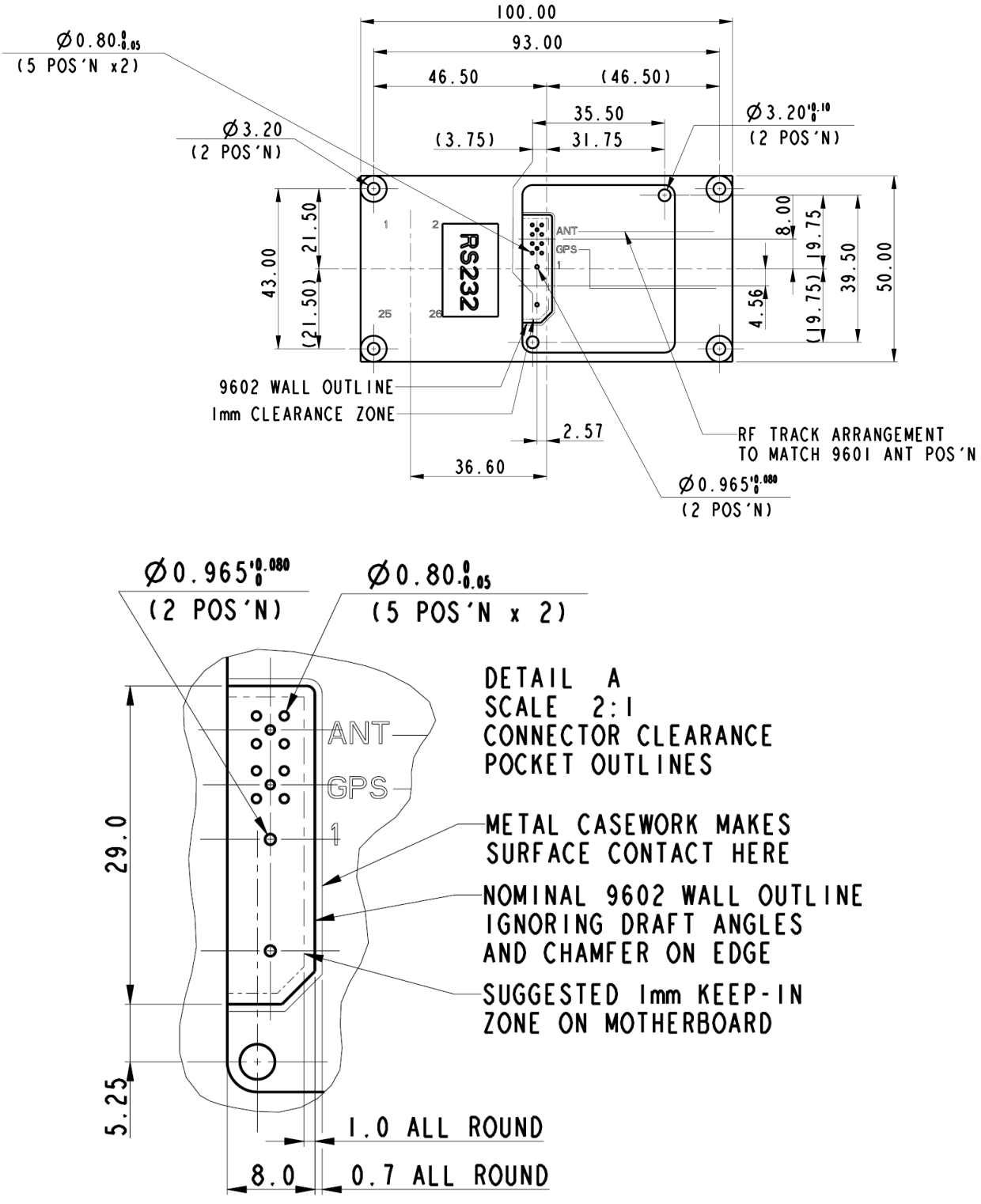

Figure 4. Example Host System Motherboard Footprint showing Mounting Position of 9602N (Not to scale. Dimensions in millimeters)

Notes for Figure 4

1. This example of a host system motherboard footprint is shown for illustrative purposes only. The host system may require a different PCB layout or mechanical arrangement.
2. The 9602N is designed to be incorporated within a host system. As such, the antenna or cable distribution system that feeds the host system should be terminated in a robust RF connector that is suitable for the end-application.
3. Safety isolation requirements for external antennas or cable distribution systems should also be taken into consideration when designing the motherboard. A suitably safe design for the RF connections should be incorporated into the host system motherboard, ideally using a chassis-bonded ground connection to the antenna cable shield.
4. The surface below the transceiver should be a conductive ground plane such that the transceiver bonds to the motherboard ground system thus reducing the possibility of radiated emissions. This also requires that the mounting screws get properly tightened to 7 pound-inches of torque.
5. The transceiver is to be installed in a "service access only" area not accessible by untrained personnel.



Although the transceiver dissipates very little power, its use in ambient temperatures in excess of 60 deg C will make the caseworks considerably hot.

2.3. Environmental

2.3.1. Environmental Specification

The environmental specifications of the 9602N are summarized in Table 3 below.

Table 3. Environmental Specifications

Parameter	Value
Operating Temperature Range[1]	-40ºC to + 85ºC
Operating Humidity Range	≤ 75% RH
Storage Temperature Range	-40ºC to + 85ºC
Storage Humidity Range	≤ 93% RH

2.3.2. Environmental Tests Performed

The 9602N complies with the specifications listed in Table 4.

Table 4. 9602N Environmental Tests

Test Name	Test Reference	Test Description
Thermal Shock	EN60068-2-14:2009	Change of Temperature, -25°C to +70°C, 5 cycles of 1 hour each
Humidity	IEC60068-2-78:2002	Damp heat steady state 40°C 93% RH for 4 days
Vibration	IEC60068-2-64:2008	0.96 m2/s3 from 5Hz to 20Hz 21Hz to 500Hz dropping 6dB per octave
Vibration	SAE J1455: 2012 Section 4.10	10-40Hz at 0.02g^2/Hz 40-500Hz dropping 6dB per octave
Shock	EN60068-2-27:2009	10G peak shock over a period of 11ms, 3 shocks in 3 perpendicular orientations
Shock	SAE J1455: 2012 Section 4.11 Society of Automotive Engineers	Drop 1m onto concrete in 3 perpendicular orientations (3 drops)

[1] Operating Temperature Range based on a duty-cycled usage model with 9602N sending one SBD message per hour and is otherwise turned off during the hour. Iridium has tested the 9602N per these temperature conditions and partners venturing outside of these stated conditions need to ensure they have engineered a solution appropriate to the stated environmental conditions for the 9602N.

2.4. Physical Interface Connectors

The Iridium 9602N SBD Transceiver incorporates three connectors:

- A multiway user connector
- An RF antenna connector
- A GPS RF pass-through connector

The physical characteristics of the connectors and their electrical interfaces are described in more detail in Sections 3.1.1 and 4.1 respectively.

3. Electrical Interfaces

The following subsections contain information for the electrical interfaces of the 9602N Transceiver for the non-RF connections. The RF interfaces are covered in section 4.

3.1. User Connector

The user connector provides the following connections to the 9602N transceiver:

- DC power supply input
- Power on/off control
- Serial data interface
- Network available output
- Supply power indicator output

3.1.1. User Connector Type

The connector on the 9602N is a Samtec low-profile header connector, part number FTSH-110-01-L-DV.

This connector provides the ability for a stackable board to board configuration, allowing connection to the host system motherboard.

Data sheets on these connectors can be found at: http://www.samtec.com

A suitable motherboard female socket that matches this connector is the SAMTEC header part number CLP-110-02-L-D.

3.1.2. User Connector Pin Allocation

The user connector is a 2-row 20-way header. Individual pin assignments are shown in Table 5 and the limits for the digital signals are listed in Table 6. Multiple supply grounds are provided and all supply and supply grounds are required to be connected to the power supply in order to limit the current on any one pin. Multiple signal grounds are provided to reduce cross-talk.

Table 5. User Connector Pin Allocation

Pin No.	Signal Name	Signal direction (WRT 9602N)	Signal function	Signal level
1	EXT_PWR	Input	Supply	+5 V +/- 0.5 V
2	EXT_PWR	Input	Supply	+5 V +/- 0.5 V
3	EXT_GND	Input	Supply return	0 V
4	EXT_GND	Input	Supply return	0 V

Pin No.	Signal Name	Signal direction (WRT 9602N)	Signal function	Signal level
5	ON/OFF	Input	On/Off control input	Analog On: >=2.0V Off: ⍰0.5V
6	DF_S_TX	Input	Data port, serial data input	3.3V Digital
7	DF_S_RX	Output	Data port, serial data output	3.3V Digital
8	SIG_GND	Input	Signal ground	0V
9	DF_ DCD	Output	Data port, Data Carrier Detect	3.3V Digital
10	DF_ DSR	Output	Data port, Data Set Ready	3.3V Digital
11	DF_ CTS	Output	Data port, Clear-to-Send	3.3V Digital
12	DF_RI	Output	Data port, Ring Indicator	3.3V Digital
13	DF_ RTS	Input	Data port, Request-to-Send	3.3V Digital
14	DF_ DTR	Input	Data port, Data Terminal Ready	3.3V Digital
15	SIG_GND	Input	Signal ground	0V
16	Reserved			
17	Reserved			
18	SIG_GND	Input	Signal ground	0V
19	NETWORK AVAILABLE	Output	Signals when the 9602N can see an available satellite network	3.3V Digital Available = high Not available= low
20	SUPPLY_OUT	Output	Supply power indicator output	+3.3 V 5mA maximum

Table 6. Limits for 3.3V Digital Signals

Parameter	Symbol	Min	Typ	Max	Unit
Input High Voltage	VIH	2.0		5.5	V
Input Low Voltage	VIL	-0.3		0.8	V
Output High Voltage	VOH	2.4			V
Output Low Voltage	VOL			0.4	V
Low Level Output Current	IOL			4.4	mA
High Level Output Current	IOH			5.5	mA

Figure 5 provides a reference for the pin designation. This view is not to scale and not representative of the connector mechanical layout. This view is for illustrative purposes only. This view designation is when looking into the user connector towards the 9602N transceiver.

The numbers indicate pin designation. Additionally, on the 9602N PCB, pin 1 on the user connector is indicated on the board silkscreen.

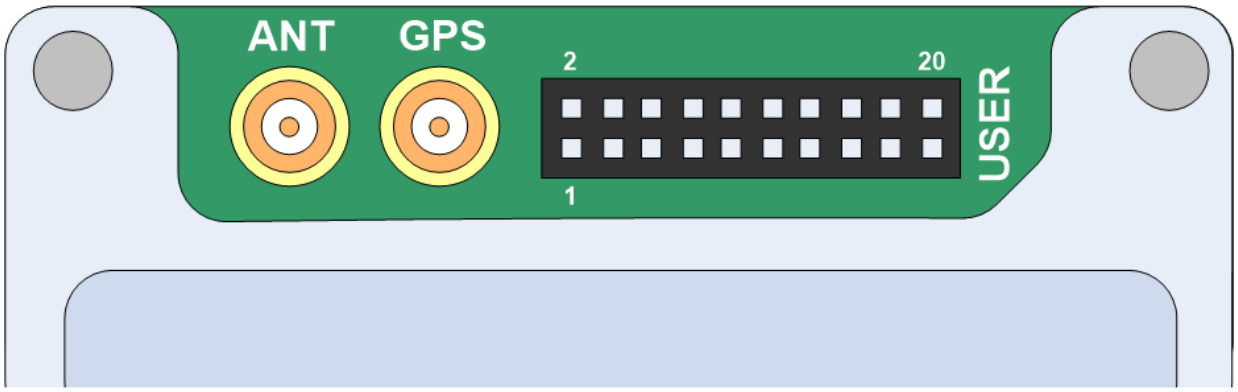

Figure 5. User Connector Pin Number Designation (from below module)

3.2. DC Power Interface

The DC power interface is comprised of the DC power inputs and control signals as summarized in Table 5. The +5V Inputs and 0V supply returns are used to supply DC power to the 9602N and ensure that enough current can be drawn across the connector without the 9602N malfunctioning during transmit due to lack of current supply. Note that all power and ground pins should be connected externally.

The DC power supply requirements for the 9602N are summarized in Table 7 below. Note that these requirements apply to DC power measured at the 9602N User connector input and not at the output of the power supply. Long power supply cables can cause a voltage drop sufficient to cause the voltage to be out of specification at the physical power supply input to the 9602N.

Table 7. DC Power Input Specifications

Parameter	9602N Value
Supply Input Voltage Range	5.0V DC +/-0.5V
Supply Input Voltage Ripple	< 40 mV pp
Typical Power Consumption at +5.0 VDC	*9602N Value*
Idle Current (average*)	35mA
Idle Current (peak)	170mA
Transmit Current (peak)	1.3A
Transmit Current (average*)	140mA
Receive Current (peak)	170mA
Receive Current (average*)	40mA
SBD message transfer - average current*	150mA
SBD message transfer - average power*	<= 0.8 W

***NOTE**: The average power consumption will vary depending on the view of the satellite constellation from the antenna.

The external power supply needs to **guarantee** the following:

- The supply voltage droop over for a 8.3ms burst of 1.3A (9602N) current should not be more than 0.2 Volts.
- The power supply should limit the in-rush[2] current to 4 Amps maximum.
- The power source shall provide for over current protection in case of device malfunction.
- The supply noise should be less than the limits in the following profile:
  - 100 mVpp from 0 to 50 kHz
  - 5 mVpp at 1 MHz measured in 50 kHz bandwidth
  - 10 mVpp at 1 MHz measured in 1 MHz bandwidth
  - 5 mVpp above 5 MHz measured in 1 MHz bandwidth

[2] In rush limit refers to the impedance of the transceiver when it is **not** powered - it is very low. When power is supplied from an unlimited supply the instantaneous current can exceed 4 Amps. If the current exceeds this value damage can occur. This can be limited in several ways, including using a supply that cannot provide more than 4 Amps instantaneously; or providing some series inductance/resistance to the supply lead.

3.2.1. Power On/Off Control

An external on/off input is provided on a pin of the User connector. The 9602N starts up when power is applied and the power on/off input is high. As long as the input voltage is applied, logic high on this line turns the transceiver on and logic low turns it off. If this line is not required then it must be connected directly to the +5 V supply.

Prior to turning off the transceiver a "flush memory" (AT*F) command should be issued to ensure all memory write activity is completed. When a transceiver has been turned off, Product Developers should not reapply power on a unit until more than 2 seconds has elapsed after power has reached 0V. Additionally, if a unit does not respond to AT commands, power off the transceiver, wait for 2 seconds and then power it back on.

When a 9602N is powered off the power on reset circuit requires 2 seconds for voltages to decay. If the 2 second wait time is not adhered to the reset circuit may not operate and the transceiver could be placed in a non-operational state. The state is not permanent and can be rectified by the above procedure.

3.2.2. Typical Power Usage Profile

This section is designed to give the Product Developer some insight to the electrical power profile that the 9602N uses. It does not describe every situation and permutation possible. It should be used as a starting point for the Product Developer to continue its own development design. The actual usage profile can vary for a number of reasons:

1. View of the sky - if in poor visibility of the sky where a clear line of sight is not available between the transceiver and the satellite
2. The higher the antenna VSWR the higher the current consumed
3. How often the 9602N transceiver is activated/deactivated by the Host Controller system
4. Manufacturing variation from transceiver to transceiver

The host system designer should ensure their design covers for worst case power consumption scenarios. Figure 6 provides a graphical representation of the typical current profile of a 9602N Transceiver sending and receiving SBD messages.

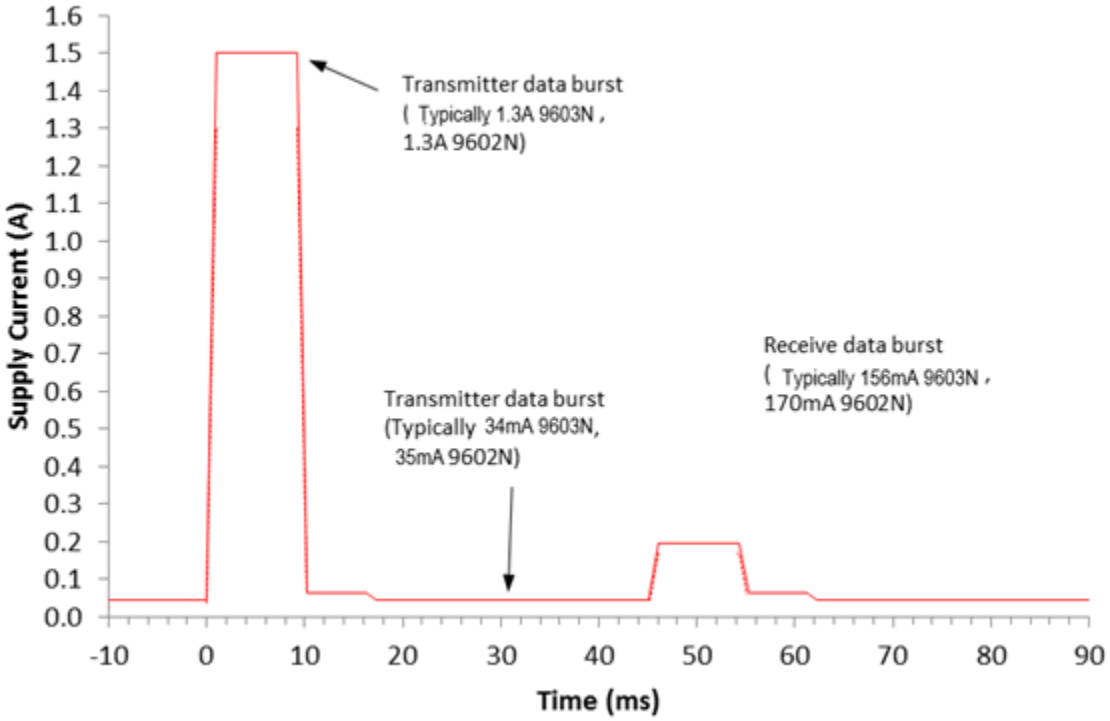

Figure 6. 9602N/9603N Typical SBD Current Profile

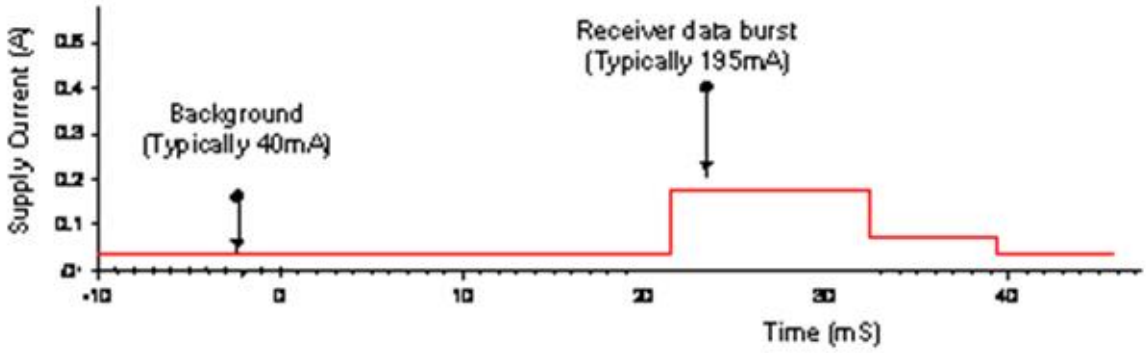

Figure 7. 9602N/9603N Typical Burst Current Profile

3.3. Serial Data Interface

The Serial data interface is used to both command the 9602N and transfer user data to and from the Transceiver. The 9602N presents a 9-wire data port to the FA (Field Application), where the interface is at 3.3V digital signal levels. With respect to this interface, the 9602N behaves as a DCE (Data Communication Equipment), and the FA behaves as a DTE (Data Terminal Equipment).

The terms "FA" and "DTE" are used interchangeably throughout this document. Autobaud is not supported in the 9602N Transceiver. The baud rate can be set via the AT+IPR command. The default rate is 19200 bps.

See the *Iridium 9602 and 9603 AT Command Reference Guide* for more information.

3.3.1. 9-Wire and 3-Wire Operation

By default, the serial interface operates as a 9-wire connection. Table 8 describes each of the signals, where "input" means an input to the 9602N, and "output" means an output from the 9602N Transceiver.

Table 8. Serial Interface Signals

Signal	Description
RX	Active high data output [The DTE receives the data from the 9602N]
TX	Active high data input [Data is transmitted from the DTE to the 9602N]
GND	0V
RTS	Active low flow control input
CTS	Active low flow control output RTS and CTS are used together to implement hardware flow control when enabled with AT&K3
DTR	Active low handshaking input AT&Dn controls how the 9602N uses DTR: • If set to AT&D0, DTR is always ignored. • Otherwise DTR set to OFF places the data port into UART test mode after 10 seconds, or immediately on boot-up. A subsequent transition of DTR to ON returns the data port to DCE mode and resets it to its power-on state. • The UART test mode is provided for factory testing of the data port UART. An FA should never activate test mode; if it does, the 9602N will stop responding to AT commands until the data port is returned to DCE mode.
DSR	Active low handshaking output The 9602N drives DSR ON when the data port is in DCE mode, and OFF when the data port is in test mode. The DTE may use this signal as an indication that the 9602N is powered up and ready to receive AT commands.
RI	Active low ring indicator output The 9602N drives RI ON when it receives a Automatic Notification from the network that a Mobile Terminated SBD Message is queued at the Gateway, and drives RI OFF after 5 seconds or when the DTE initiates an SBD session, whichever occurs first.
DCD	Active low handshaking output DCD is driven OFF at all times.

Note that the Ring Indicator (RI) pin is used by the 9602N SBD Transceiver to indicate that a Mobile Terminated SBD (MT-SBD) message is queued at the Gateway. The Field Application can monitor this pin and use appropriate AT Commands to command the Transceiver to retrieve the MT-SBD message.

The serial interface may be operated with a 3-wire connection, where only transmit, receive, and ground signals are used. However the 9 wire interface offers better control and is the recommended implementation. Iridium is only able to provide limited 3-wire interface support. Due to the small code space and limited processing resources of the 9602N the flow control is limited.

When operating with a 3-wire connection, the following rules apply:

- AT&Dn must be set to AT&D0 to ignore the DTR input
- AT&Kn must be set to AT&K0 to disable RTS/CTS flow control
- The other output signals may be connected, and operate as follows:
  - CTS driven ON (low)
  - DSR operates as normal
  - RI operates as normal
  - DCD driven ON (low)

NOTES:

1. RTS/CTS flow control, when enabled, is only used when the data port is in SBD data mode. In AT command mode, RTS is ignored and CTS is driven ON (low).
2. If the DC input to the transceiver is to be disconnected, the developer will need to "tri-state" the serial interface to prevent a possible latch-up condition.

3.3.2. Configuration Settings

The 9602N allows the DTE to configure the data port communication parameters. The three configuration types are active, factory default, and stored. The active configuration is the set of parameters currently in use. They can be changed by the DTE individually via specific AT commands. The factory default configuration is stored in permanent memory. This configuration can be recalled at any time through use of the AT&Fn command.

Two groups of settings, or "profiles", can be stored as user-defined configurations. The DTE first creates desired active configurations and then writes them to memory using the AT&Wn command. These profiles can be designated to be loaded as the active configuration upon 9602/9602N power-up through use of the AT&Yn command. The 9602N can be reset without loss of power to these profiles through use of the ATZn command.

The configuration settings are stored in "S-register" locations and are detailed further in the *Iridium 9602 and 9603 AT Command Reference Guide*.

3.3.3. Modes of Operation

The behavior of the serial interface depends on the mode of operation. The 9602N now supports two operating modes: Short Burst Data® (SBD) and Burst. Operating modes are selected with the +MODE command. Each operating mode has sub-operating modes which affect the behavior of the parent mode.

The default operating mode is *command mode*. When the data port is in *command mode*, AT commands can be entered to control the 9602N. In *command mode*, flow control has no effect, with the RTS input ignored and the CTS output driven ON (low).

AT+MODE

- Switches between SBD and Burst Mode
- n=3 for SBD, n=4 for Burst

3.3.3.1. SBD Mode

SBD mode has two sub-operating modes: SBD data mode and SBD session mode. When in SBD data mode, the 9602N is transferring binary or text SBD message data to or from the DTE.

In SBD data mode:

- All characters from the DTE not forming part of the message data are ignored (i.e. no AT commands may be entered)
- No unsolicited result codes are issued.
- RTS/CTS flow control, if enabled, is active. When RTS is OFF (high), the 9602N suspends transfer of data to the DTE; when CTS is OFF (high), the 9602N expects the DTE to suspend transfer of data to the 9602N.

When in SBD session mode, the 9602N is attempting to conduct an SBD session with the network. In SBD session mode:

- The DTE must wait for the +SBDI[X][A] session result code.
- All characters from the DTE are ignored.
- Unsolicited result codes are issued where those codes have been enabled.

Transitions between the modes of operation are performed automatically by the 9602N in response to the SBD AT Commands; the DTE has no other control over the mode.

3.3.3.2. Burst Mode

When in Burst mode, the transceiver receives Burst message segments over the air. The transceiver builds up a message piece to be directed to the DTE. Burst mode includes two sub-operating modes for communicating with the DTE: Terminal Push mode and Client Pull mode. The +GDBMOD AT command is used to select which to use.

AT+GDBMOD=n

- Iridium Burst operating mode command
- n=0 for 'pull' mode, n=1 for 'push' mode

In Terminal Push mode:

- Messages will be automatically displayed to the DTE as they are received in an asynchronous fashion.
  - When +GDBMOD=1, the date/time-stamp, service name, and other information will be displayed in the header fields of each piece.

This method has the distinct advantage of low two-way communication overhead. However, this is essentially a "fire and forget" method from the receiver perspective. The client application must always be ready to receive the next message without warning, and once a message has been emitted from the receiver, the buffer for that message is automatically cleared. In the event of a failure to match the CRC of the message, the client application will not have an opportunity to request that the message be resent. For this reason, the "push" method may be more suitable for applications where the receiver device and host computer are collocated on a circuit board, or at least have a minimum of hardware and cabling between to reduce the possibility of noise and bit errors across the serial link.

In Client Pull mode:

- Data is read from the transceiver in a synchronous fashion.
- The Ring Indicator (RI) line of the serial port is used as a hardware "flag" to indicate that data is available in the receiver
  - This status can also be obtained from the +CRIS command at the AT interface.
- When the RI line has been asserted, the client application must then issue a +GDBRD command to retrieve the received message from the buffer.
- Once the message has been received, there is an opportunity for the client application to check the CRC value and determine if an error occurred.
  - If an error did in fact occur, the application may then request that the message be resent by requesting the buffer reference of the last message using the +GDBREF command, then using that reference number in the +GDBRD command to request the specific buffer.
- Once the message piece has been correctly received, the application may then tell the transceiver to release the buffer by issuing the +GDBCMB=n command.
  - Where 'n' is the buffer number from the header, or from the +GDBREF command.
  - An asterisk '*' will clear all buffers.
  - **NOTE:** This is a necessary step, and failure to do so will lead to the Receiver running out of available buffer space and dropping new incoming Burst message segments.

3.3.4. Serial port signal levels

3.3.4.1. Data Port Inputs

The inputs on the 9602N serial port (RTS, DTR and TXD) will operate correctly at 3.3V digital signal levels.

RS-232 interface chips can be fitted to the host system motherboard if connection to an external RS232 link is required. Note that these may invert the digital logic level, so another inversion may be required.

3.3.4.2. Data Port Outputs

The five outputs from the 9602N serial port (DCD, DSR, CTS, RI and RXD) are all at 3.3V digital levels.

3.4. Hardware Failure Reporting

If the 9602N detects a hardware problem during initialization, the 9602N may be unable to function correctly. The 9602N notifies the DTE of this situation by issuing an unsolicited result code at the end of initialization:

```
HARDWARE FAILURE: <subsys>,<error>
```

where <subsys> identifies the software subsystem that detected the error, and <error> is the subsystem-specific error code.

Any AT commands that cannot be handled in the failure condition will terminate with result code 4 ("ERROR").

3.5. Network Available Output

This is a digital output that can be used by an application to know when the transceiver has visibility to the satellite network. This is useful in applications where the transceiver may move around terrain that reduces the amount of time that clear line of sight to the satellite constellation is available. The Product Developer can use this output to preserve battery life by reducing the number of attempted transmissions by including this logic output in the application decision logic.

Network Available means only that the 9602N can successfully receive the Ring Channel, or, put more simply, it can see an Iridium satellite. Network Available is not a guarantee that a message can be successfully sent. The Network Available state is evaluated every time the Ring Channel is received or missed. If the Ring Channel is visible, then that is typically every 4 seconds. If the Ring Channel is not currently visible, then the update period can be as long as 2 minutes, depending on how long the lack of satellite visibility existed. This is because the 9602N attempts to conserve power by increasing the ring search interval while the satellites are not visible. Every time a ring search fails, the time to wait is increased and eventually limits at 120 seconds.

If Network Available is currently off, the Field Application may still attempt an SBDI[X] session. This will force the 9602N Transceiver to look for the Ring Channel immediately, and on finding it, to attempt to send the message. In this case Network Available will not come on immediately. The Network Available does not turn on while in a +SBDI session. It will however turn on 4 seconds later assuming that the Ring Channel is present. After the SBD session completes, the 9602N performs a new Ring Channel search sequence, at the end of which Network Available gets turned on. That can take between 4 and 12 seconds.

The wait time between search windows is reset to 4 seconds every time a search succeeds. Otherwise it continues to increase. So if the +SBDI attempt fails to find the ring channel, the search window does not reset to 4 seconds.

Note that the behavior of +CIEV:1 is identical in to that of the Network Available output.

3.6. DC Supply Indicator Output

A DC supply indicator signal is provided by the 9602N which could be used directly for driving an LED to provide a visible indication that the Transceiver supply is on. Alternatively, the output signal could be used in application logic to determine if the internal Transceiver power supply is on.

4. RF Interface

This section describes the physical characteristics of the RF connectors and specifications of the RF Interface.

4.1. RF Connector Types

When mating to the 9602N RF connector use MMCX male connectors from SAMTEC part number MMCX-P-P-H-ST-TH1. This is a thru hole printed circuit mount connector with the correct mechanical spacing to allow the 9602N to fit flush on the motherboard.

NOTE: The 9602N RF connector has a different connector than other Iridium Transceivers.

Both RF connectors on the 9602N transceiver are intended for an inter-board connection to the host system motherboard and should not be directly connected to an external antenna cable or cable distribution system.

Additional information can be found at: http://www.samtec.com

4.2. ANT Connector

The main RF connector for the 9602N is the antenna connector, labeled "ANT" in the board silkscreen. This provides the RF connection between the 9602N transceiver and the host system motherboard.

Note that for safety reasons, both RF connectors on the 9602N transceiver are intended for an inter-board connection to the host system motherboard and should not be directly connected to an external antenna cable or cable distribution system. The EN609502 compliance standard outlines that telecommunications equipment needs protection from a 2KV spike. The MMCX connectors are not capable of 2KV operations therefore protection needs to be provided on the developer’s motherboard and a larger connector needs to be used. Developers are encouraged to review the EN609502 compliance standards for additional details.

4.2.1. Antenna Characteristics

The 9602N should be connected to an Iridium-band antenna with the following antenna connector characteristics as described in Table 9.

Table 9. Antenna Characteristics

Parameter	Value
Impedance	50 Ohms nominal
Gain	3dBi
Polarization	RHCP
VSWR (maximum operational)	1.5 : 1

4.3. GPS Connector

The second RF connector, labeled "GPS" in the board silkscreen, is a pass-through connection from the antenna path and is provided for GPS receivers that wish to share the main antenna. An overview of this circuit is provided in Figure 7. The following operational points should be noted when using GPS receivers connected to this point.

- The GPS pass-through path is activated by detecting the presence of a DC voltage on the center-pin of the GPS connector. The 9602N uses the voltage from the GPS center pin to switch on the RX path and requires minimal current (<100uA). The GPS path activated when this center-pin voltage is higher than 1.2V (9602) / 1.6V (9602N).
- There is a gain of approximately +5.0dB (9602N) in the receive direction from ANT to GPS.
- The GPS receive path is temporarily switched off during transmissions from the 9602N.
- As long as the 5V supply to the 9602N is connected and the DC voltage on the GPS connector is present, the GPS pass-through path is made available. The GPS path is available even when the 9602N transceiver has been turned off using its ON/OFF control signal.
- If the GPS port is not used it may be left un-terminated with no adverse effect.
- The GPS receiver must present 50 ohm impedance across the Iridium band or SBD performance could be degraded.
- The output return loss is typically -8 dB.

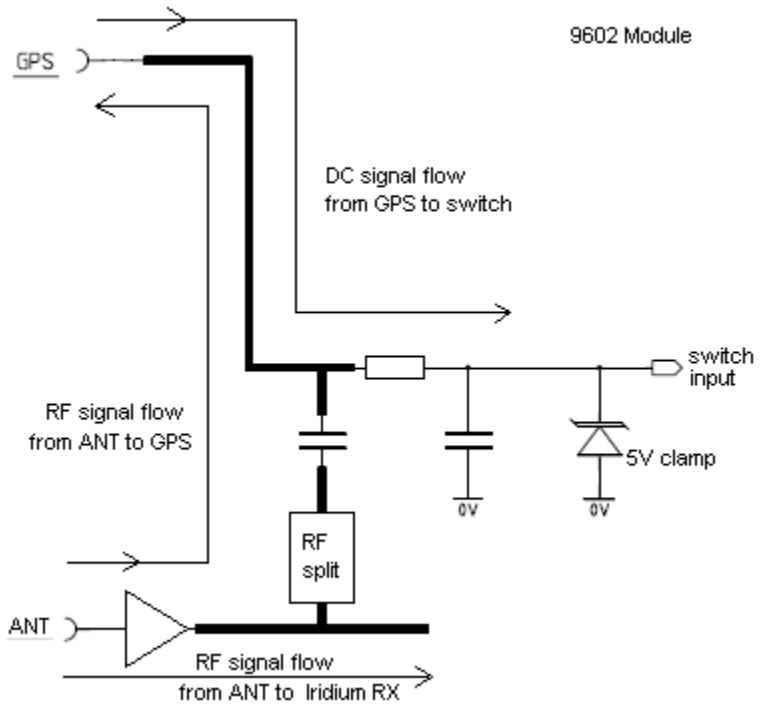

Figure 8. Equivalent Circuit for GPS Connection when GPS Path is Active and 9602N is Not Transmitting

4.4. Radio Interface Specifications

The RF interface requirements for the 9602N are summarized in Table 10 below.

Table 10. General RF Parameters

Parameter	Value
Frequency Range	1616 MHz to 1626.5 MHz
Transmit Frequency Range	1616 MHz to 1626 MHz
Receive Frequency Range	1616 MHz to 1626.5 MHz
Duplexing Method	TDD (Time Domain Duplex)
Input/Output Impedance	50Ω
Multiplexing Method	TDMA/FDMA

4.5. Radio Characteristics

Table 11 contains radio characteristics of the 9602N Transceiver.

Table 11. Radio Characteristics

Parameter	9602N Value
Average Power during a transmit slot (max)	1.6 W
Receiver sensitivity (Typical level at transceiver connector)	-116 dBm
Max Cable loss permitted (Note 1)	2 dB
Link Margin - Downlink (Note 2)	13 dB
Link Margin - Uplink (Note 2)	7 dB
Transmit Power (average power in the transmit burst): Conducted power at antenna port:	31.7 dBm +/- 0.5 dB

Note 1: Cable losses should be minimized. The total implementation loss for an antenna, connectors, cable, lightening arrestor and any other RF component between the transceiver and the antenna should not exceed 3 dB. The total cable loss between the antenna and the transceiver includes losses in the motherboard. Implementation loss higher than this will affect the Iridium link performance and quality of service. Solutions with a loss higher than 3 dB will not meet the requirements of Iridium Solution Certification.

Note 2: Link Margins are given assuming a free-space propagation model.

4.6. S-meter Performance

The numbers reported over the AT command interface indicate the signal strength of the ring channel. Care should be taken when using the S-meter readings for comparisons between devices. Of particular note are the following:

1. There is a 0.5 dB tolerance on calibrating the S-meter.
2. Each bar represents a 2 dB increment.
3. Multiple ring channels can be present at the same time so units can lock to different signals.
4. The Test Interface Card (TIC board) implementation adds about 0.6 dB loss in the antenna path.
5. If the reading is near the decision threshold it would be easy to see a 1 bar difference.

5. AT Command Set Description

The 9602N is configured and operated through the use of AT commands. See the *Iridium 9602 and 9603 AT Command Reference Guide* for the full set of AT commands and responses. For differences in AT command support between 9602N software releases, see the relevant software release notes, which are made available to authorized Iridium VARs and VAMs on the Iridium for Partners website. It is the responsibility of Product Developers to check compatibility of applications software with the AT Commands on all 9602Ns used for both development and commercial deployments. See also the *Iridium Short Burst Data Service Developers Guide* for information on how SBD operates on the Iridium® network. See the *Iridium Burst Service Developer Guide* for information on how Burst operates on the Iridium network.